0K0135

SCHEMATIC – DIAGRAM

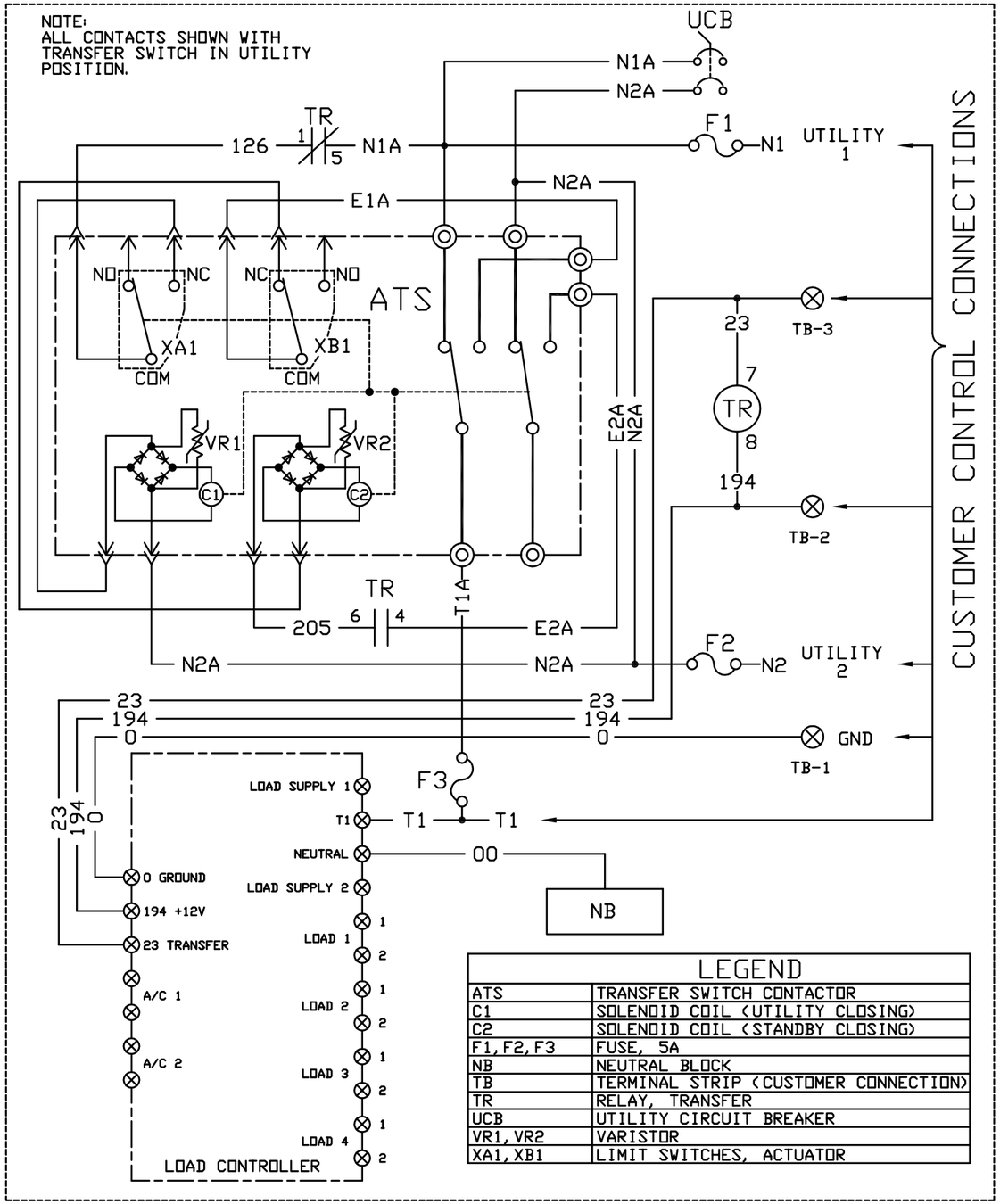

LEGEND	
ATS	TRANSFER SWITCH CONTACTOR
C1	SOLENOID COIL (UTILITY CLOSING)
C2	SOLENOID COIL (STANDBY CLOSING)
F1, F2, F3	FUSE, 5A
NB	NEUTRAL BLOCK
TB	TERMINAL STRIP (CUSTOMER CONNECTION)
TR	RELAY, TRANSFER
UCB	UTILITY CIRCUIT BREAKER
VR1, VR2	VARISTOR
XA1, XB1	LIMIT SWITCHES, ACTUATOR

WIRING – DIAGRAM

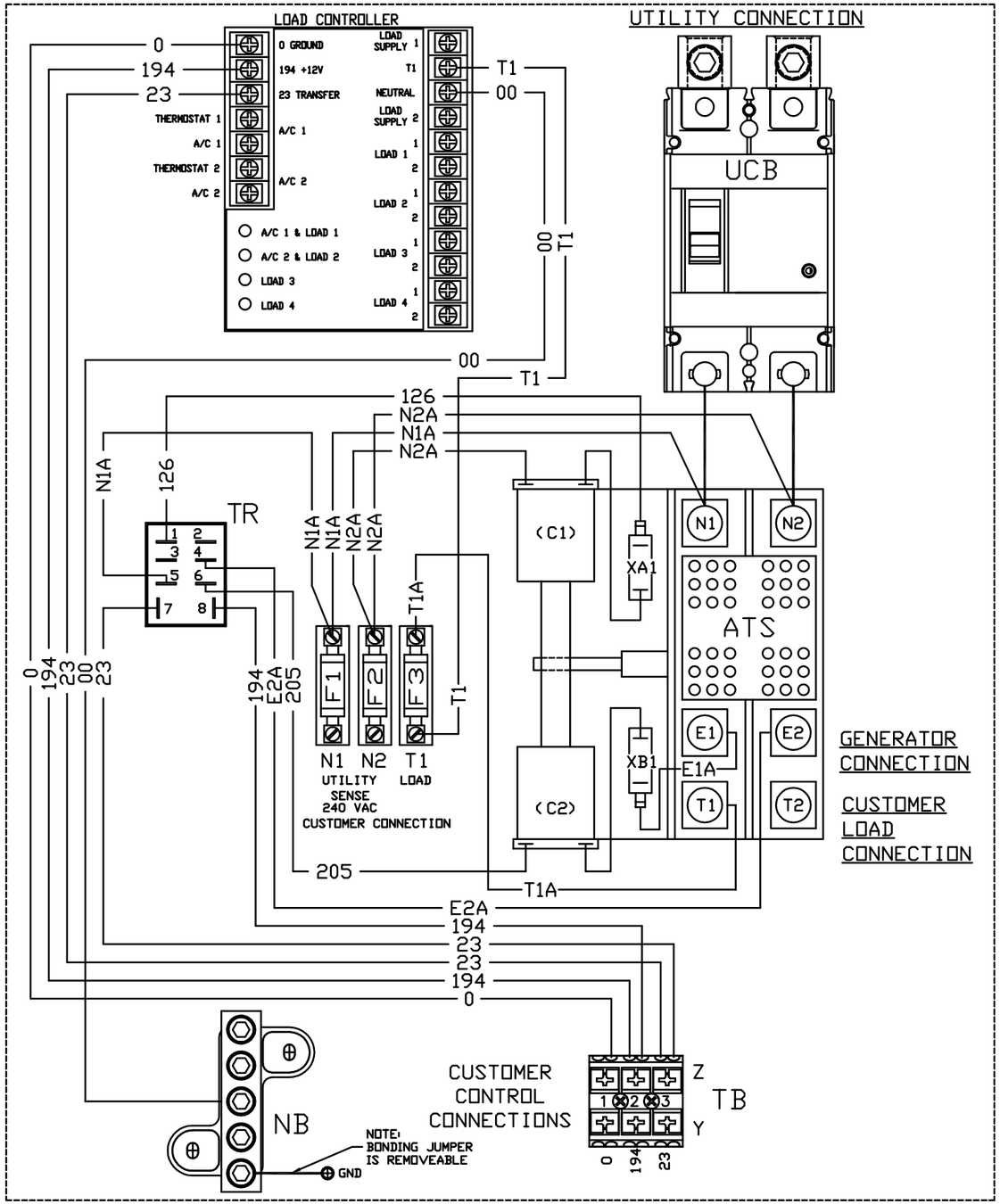

	-A-	RELEASED FOR PRODUCTION
2/28/13	J-4251-B	CHANGE RELAY TERMINAL NUMBERS TO MATCH IDEC RELAY
4/22/13	J-5049-C	CHANGE RELAY TERMINAL NUMBERS TO MATCH OMRON RELAY

EST. WT.
FINAL WT.

DO NOT SCALE

ALL DIMENSIONS AND TOLERANCING PER ASME Y14.5M-1994

UNLESS OTHERWISE SPECIFIED:
ALL XX DIM — ±0.4 MM
ALL XXX DIM — ±0.4 MM
ALL XXXX DIM — ±0.15 MM
ALL ANGLES — ±2°

DRAWING TITLE: SD/WD 100/200A XFER SW RTSY 2013

MATERIAL: N/A

DWN	MJB	DATE 9/20/12	MFG	N/A	DATE N/A
CHKD	JJJ	DATE 10/9/12	APPD	GDW	DATE 10/18/12
RELEASED FOR PRODUCTION		BY GDW			DATE 10/18/12

GENERAC POWER SYSTEMS
Waukesha
P.O. BOX 8
WAUKESHA, WIS. 53187

FILE NAME: 0K0135-C.DWG — SIZE D
SCALE: 1 = 1 — FIRST USE: RTS 2013
DWG NO.: 0K0135 — REV: C